150W Single Output Industrial DIN RAIL

EDR-150-24

Features

- Universal AC input / Full range
- Protections: Short circuit / Overload / Over voltage / Over temperature
- Cooling by free air convection
- Can be installed on DIN rail TS-35/7.5 or 15
- UL 508 (industrial control equipment) approved
- EN61000-6-2(EN50082-2) industrial immunity level
- 100% full load burn-in test
- 2 years warranty

Applications

- Industrial control system
- Semiconductor fabrication equipment
- Factory automation
- Electro-mechanical apparatus

Description

EDR-150 is one economical slim 150W Din rail power supply series, adapt to be installed on TS-35/7.5 or TS-35/15 mounting rails. The body is designed 40mm in width, which allows space saving inside the cabinets. The entire series adopts the full range AC input from 90VAC to 264VAC and conforms to EN61000-3-2(≦80% Load), the norm the European Union regulates for harmonic current.

EDR-150 is designed with metal housing that enhances the unit's power dissipation. With working efficiency up to 87%, the entire series can operate at the ambient temperature between -20℃ and 60℃ under air convection. It is equipped with constant current mode for over-load protection, fitting various inductive or capacitive applications. The complete protection functions and relevant certificates for industrial control apparatus (UL508, TUV EN60950-1, and etc.) make EDR-150 a very competitive power supply solution for industrial applications.

Model Encoding

EDR - 150 - 24

- 24 — Output voltage
- 150 — Output wattage
- EDR — Model name

SPECIFICATION

MODEL		EDR-150-24
OUTPUT	DC VOLTAGE	24V
	RATED CURRENT	6.5A / 230VAC 5.2A / 115VAC
	CURRENT RANGE	0 ~ 6.5A / 230VAC 0 ~ 5.2A / 115VAC
	RATED POWER	156W / 230VAC 125W / 115VAC
	RIPPLE & NOISE (max.) Note.2	150mVp-p
	VOLTAGE ADJ. RANGE	24 ~ 28V
	VOLTAGE TOLERANCE Note.3	±1.0%
	LINE REGULATION	±0.5%
	LOAD REGULATION	±1.0%
	SETUP, RISE TIME	1500ms, 60ms/230VAC 3000ms, 60ms/115VAC at full load
	HOLD UP TIME (Typ.)	16ms/230VAC 10ms/115VAC at full load
INPUT	VOLTAGE RANGE Note.6	90 ~ 264VAC 127 ~ 370VDC [DC input operation possible by connecting AC/L(+), AC/N(-)]
	FREQUENCY RANGE	47 ~ 63Hz
	EFFICIENCY (Typ.)	87%
	AC CURRENT (Typ.)	2.6A/115VAC 1.7A/230VAC
	INRUSH CURRENT (Typ.)	20A/115VAC 35A/230VAC
	LEAKAGE CURRENT	<1mA / 240VAC
PROTECTION	OVERLOAD	105 ~ 130% rated output power Protection type : Constant current limiting, recovers automatically after fault condition is removed / 230VAC
		105 ~ 150% rated output power Protection type : Hiccup mode or constant current limiting, recovers automatically after fault condition is removed / 115VAC
	OVER VOLTAGE	29 ~ 33V
		Protection type : Shut down o/p voltage, re-power on to recover
	OVER TEMPERATURE	Shut down o/p voltage, re-power on to recover
ENVIRONMENT	WORKING TEMP.	-20 ~ +60℃ (Refer to "Derating Curve")
	WORKING HUMIDITY	20 ~ 95% RH non-condensing
	STORAGE TEMP., HUMIDITY	-40 ~ +85℃, 10 ~ 95% RH
	TEMP. COEFFICIENT	±0.03%/℃ (0 ~ 50℃)
	VIBRATION	Component:10 ~ 500Hz, 2G 10min./1cycle, 60min. each along X, Y, Z axes; Mounting: Compliance to IEC60068-2-6
SAFETY & EMC (Note 4)	SAFETY STANDARDS	UL508, TUV EN60950-1 approved
	WITHSTAND VOLTAGE	I/P-O/P:3KVAC I/P-FG:2KVAC O/P-FG:0.5KVAC
	ISOLATION RESISTANCE	I/P-O/P, I/P-FG, O/P-FG:>100M Ohms / 500VDC / 25℃/ 70% RH
	EMC EMISSION	Compliance to EN55022 (CISPR22) Class A, EN61000-3-2, Class A (≦80% Load), EN61000-3-3
	EMC IMMUNITY	Compliance to EN61000-4-2,3,4,5,6,8,11, EN55024, EN61000-6-2 (EN50082-2), heavy industry level, criteria A
OTHERS	MTBF	472.5K hrs min. MIL-HDBK-217F (25℃)
	DIMENSION	40*125.2*113.5mm (W*H*D)
	PACKING	0.6Kg; 20pcs/13Kg/1.16CUFT
NOTE	1. All parameters NOT specially mentioned are measured at 230VAC input, rated load and 25℃ of ambient temperature. 2. Ripple & noise are measured at 20MHz of bandwidth by using a 12" twisted pair-wire terminated with a 0.1uf & 47uf parallel capacitor. 3. Tolerance : includes set up tolerance, line regulation and load regulation. 4. The power supply is considered a component which will be installed into a final equipment. The final equipment must be re-confirmed that it still meets EMC directives. 5. Installation clearances : 40mm on top, 20mm on the bottom, 5mm on the left and right side are recommended when loaded permanently with full power. In case the adjacent device is a heat source, 15mm clearance is recommended. 6. Derating may be needed under low input voltage. Please check the derating curve for more details.	

■ Block Diagram

fosc : 70KHz

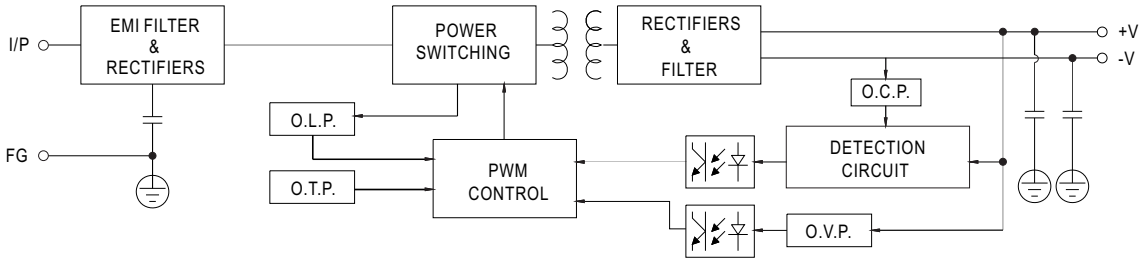

■ Derating Curve

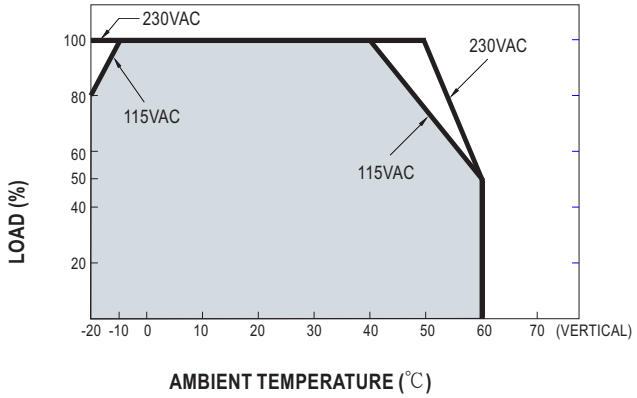

■ Static Characteristics

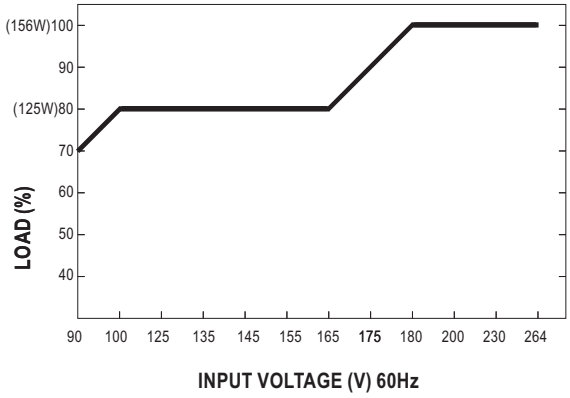

■ Mechanical Specification

Case No.992D Unit:mm

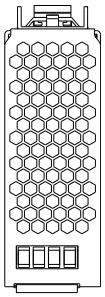

Top View

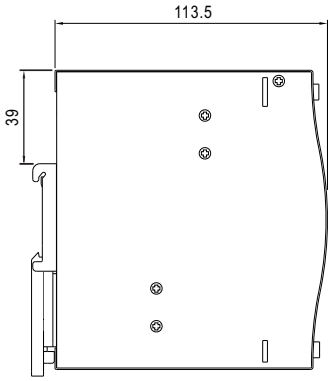

Side View

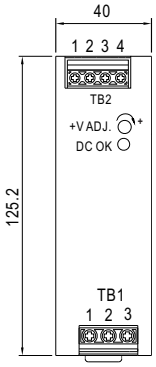

Front View

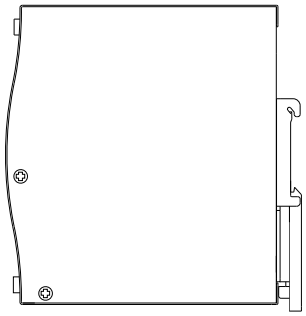

Side View

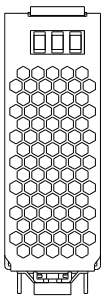

Bottom View

Terminal Pin No. Assignment (TB1)

Pin No.	Assignment
1	FG ⏚
2	AC/N or DC -
3	AC/L or DC +

Terminal Pin No. Assignment (TB2)

Pin No.	Assignment
1,2	DC OUTPUT -V
3,4	DC OUTPUT+V

■ Installation Instruction

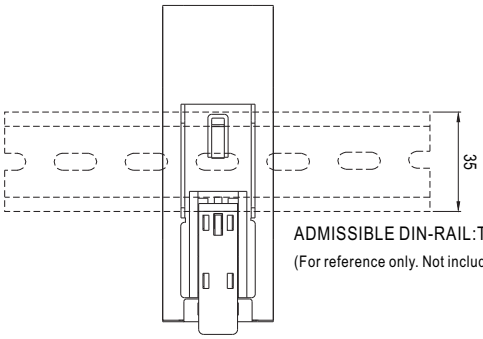

ADMISSIBLE DIN-RAIL:TS35/7.5 OR TS35/15

(For reference only. Not included with unit.)

Back View

This series fits DIN-RAIL TS35/7.5 or TS35/15.
For installation details, please refer to the USER MANUAL on
http://www.meanwell.com/search/EDR-150/EDR_manual.pdf